Type:	
Project:	
REP/Agent:	
Order #:	

BEAM DIRECT

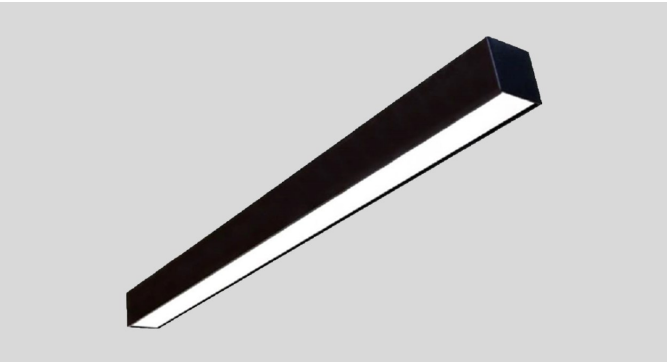

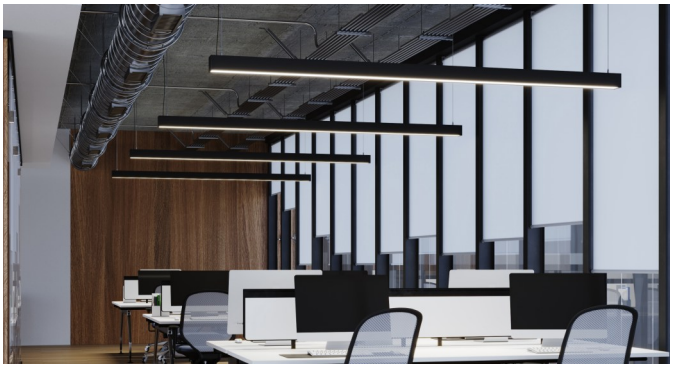

DIFFUSING

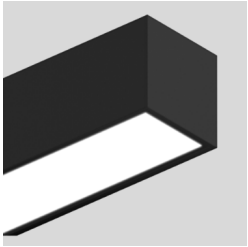

FLUSH, H: 3.5"

DLE05, H: 4.0"

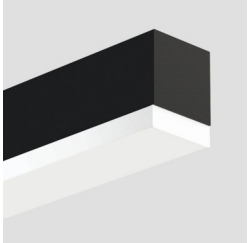

DLE10, H: 4.5"

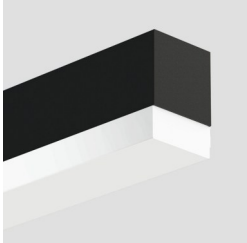

DLE15, H: 5.0"

FEATURES

- ★ Continuous lensing standard– runs up to 200'
- ★ Extruded aluminum single piece housing
- ★ Standard 2', 4', 6' and 8' units, or continuous rows
- ★ Linear runs with proprietary joiner design
- ★ Light levels can be set at the factory
- ★ Efficacy up to 140 lm/W
- ★ Soft diffuse direct lighting
- ★ Textured powder coat finishes available in white, black, and silver
- ★ Premium finishes also available
- ★ Approved for dry and damp locations
- ★ 0-10v dimming is standard
- ★ Dim to 1% of output current is standard
- ★ 90 CRI (R9 50 min) available
- ★ CA Title 24 / JA8 installation compatible
- ★ Consult factory for TM21, TM30, LM79 and LM80

DISTRIBUTION

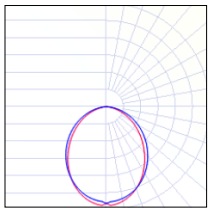

SD= SatinIce Diffuse

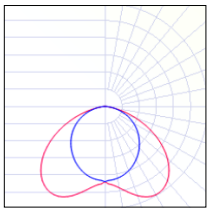

WD= Wide Diffuse

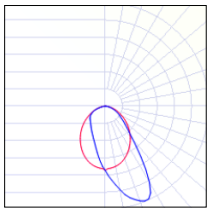

WW= Wall Wash

DIMENSIONS

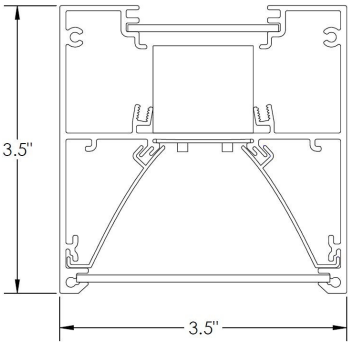

©2023 StarTek Lighting America. All rights reserved. The information in this document is subject to change without notice.

899 E Park Ave, Libertyville, IL 60048 ★ (877) STARTEK ★ www.starteklightingamerica.com

Type:	
Project:	
REP/Agent:	
Order #:	

BEAM DIRECT

BEAMD

SERIES	LENGTH	LUMENS PER FOOT	DISTRIBUTION	CCT	CRI
BEAMD	**xx**= Run Length **Sxx**= Symmetric Run Length **_x_RECT**= Rectangle **_x_L**= L-Shape **_x_x_U**= U-Shape	**350**= 350 LPF **500**= 500 LPF **750**= 750 LPF **1000**= 1000 LPF **XXX**= Custom LPF	**SD**= SatinIce Diffuse **WD**= Wide Diffuse **WW**= Wall Wash **DLE05**= 0.5" Drop Lens w/ Lit Ends **DLE10**= 1.0" Drop Lens w/ Lit Ends **DLE15**= 1.5" Drop Lens w/ Lit Ends *Seamless Continuous Lensing Unavailable for Drop Lens Options*	**30K**= 3000K **35K**= 3500K **40K**= 4000K **50K**= 5000K **TW**= Tunable White[1] *(2700-6500K)*	**80**= 80 **90**= 90 *(R9 50 min)*

FINISH	MOUNTING	VOLTAGE	ELECTRICAL
STANDARD **PW**= Powder Coat White **PB**= Powder Coat Black **PS**= Powder Coat Silver **PREMIUM** **RALxxxx**= Powder Coat RAL xxxx (Gloss Finish) **PSFx**= Prem Stock Finish **CUSTOM** **PO**= Powder Other *See pg.8 for standard and premium options*	**CABLES WITH CANOPY KITS** **ACW05**= White Cord 5' **ACW10**= White Cord 10' **ACB05**= Black Cord 5' **ACB10**= Black Cord 10' **CABLES WITH LOOPS** **ALW10**= White Cord 10' **ALB10**= Black Cord 10' **WALL MOUNTS** **WM**= Wall Mount **AWM**= Architectural Wall Mt **EWMxx**= Extruded Wall Mount, xx" **STEM WITH CANOPY KITS** **STEMWxx**= Stem White, xx" **STEMBxx**= Stem Black, xx"	**U**= 120-277 **C**= 347	**1C**= Single Circuit **MC**= Multiple Circuits *(multiple switch legs across run length)* **EC**= Emergency Circuit *(separate power drops for EC fixtures)* **GTD**= Generator Transfer Device

OPTIONS

SPECIALTY DRIVERS ***(Standard driver is 0-10V, dim to 1% output current)***

DT1= eldoLED EcoDrive Dim to 1% (0-10V)
DTZ= eldoLED SoloDrive Dim to 0.1% (0-10V)
PSRD= Philips Sensor Ready (DALI) Driver
LDE1= Lutron Hi-Lume EcoSystem LED driver with Soft-on, Fade-to-Black
TW-A= Tunable White, 0-10v[2]
TW-EL= eldoLED DUALdrive Tunable White (DALI)[2]
LD2=Lutron DALI 2 Digital Tunable White driver with 1% dimming[2]
RD-xx'-xxxxx= Remote Driver 120V-277V
Consult Factory

BATTERIES

#EMB6= 6W EM Battery (Iota/Bodine)
#EMB10=10W EM Battery (Iota/Bodine)
#FCEMB10= 10W EM Battery (Factory Choice)
#FCEMB14= 14W EM Battery (Factory Choice)

SENSORS

DMxx%= Daylight/Motion Sensor (xx%= % Min. Dimming)
VDO= Lutron Vive Integral fixture control (RF w/ daylight and occupancy)
AWNR-W= Lutron Athena Wireless Node (RF only)[3] - White Finish
AWNR-B= Lutron Athena Wireless Node (RF only)[3] - Black Finish
AWNS-W= Lutron Athena Wireless Node with Sensor - White Finish
AWNS-B= Lutron Athena Wireless Node with Sensor - Black Finish
NLA= Acuity nLight Air
WVL= Cooper Wavelinx

ENDCAPS

RD = Round Endcap (not available with Drop Lens options)

[1] ***Tunable White Driver must be specified in options***
[2] ***50 Watt Max. Dual driver required for higher fixture wattage***
[3] **D4i driver for static & DALI-2 Type 8 for tunable.**

EXAMPLE: BEAMD-40-750-SD-35K-80-PW-ACW10-U-1C-1EMB10

©2023 StarTek Lighting America. All rights reserved. The information in this document is subject to change without notice.

899 E Park Ave, Libertyville, IL 60048 ★ (877) STARTEK ★ www.starteklightingamerica.com

ACxxx (Aircraft Cable with Canopy) - Drywall, Solid, Tile (On-Grid), Tile (Off-Grid)

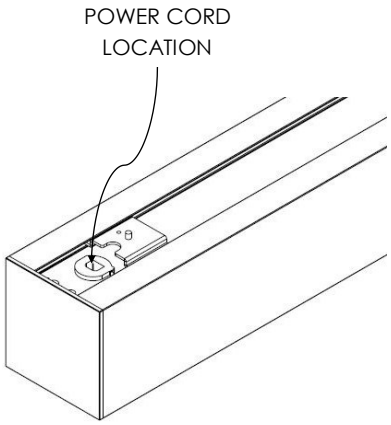

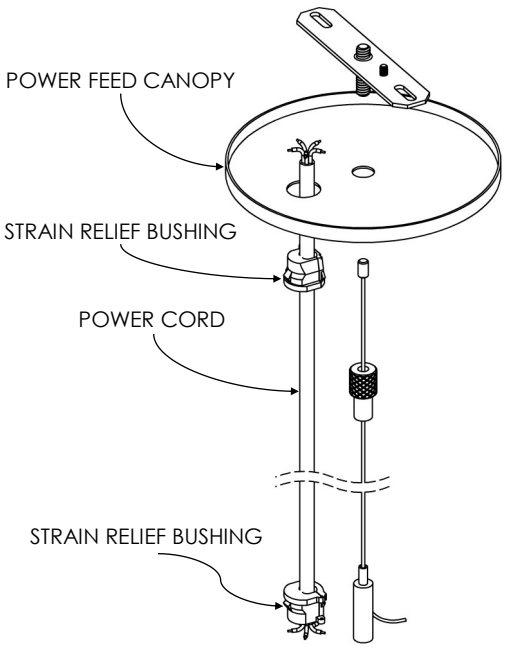

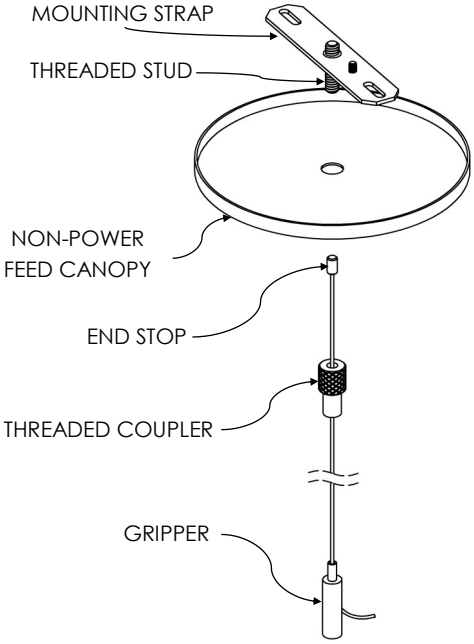

ALxxx (Aircraft Cable with Loops)

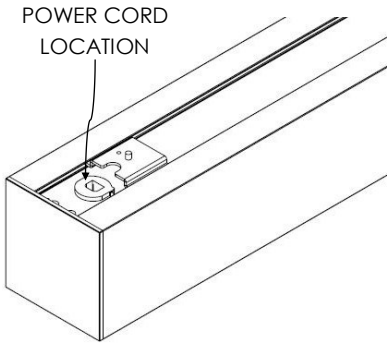

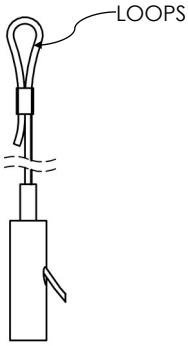

POWER CORD & FIRST MOUNT DETAIL

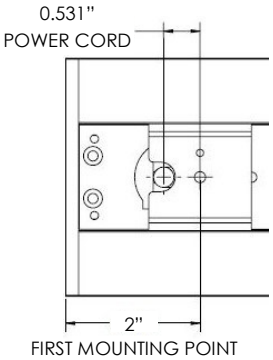

AWM (Architectural Wall Mount)

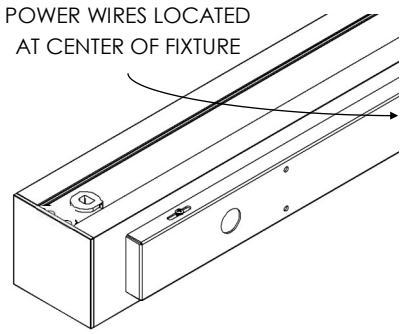

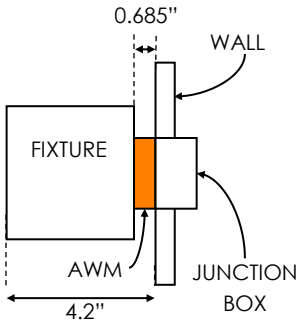

WM (Wall Mount)

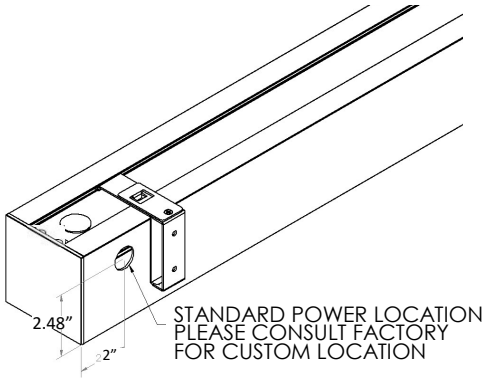

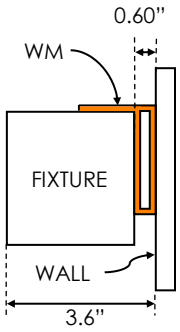

©2023 StarTek Lighting America. All rights reserved. The information in this document is subject to change without notice.

899 E Park Ave, Libertyville, IL 60048 ★ (877) STARTEK ★ www.starteklightingamerica.com

EWM (Extruded Wall Mount)

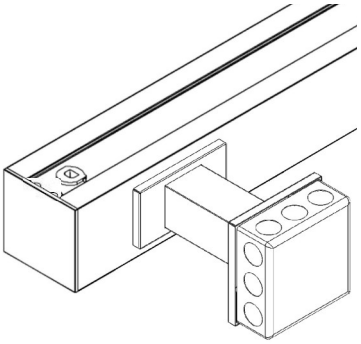

*Note: 3" standard EWM, custom sizes available up to 12"

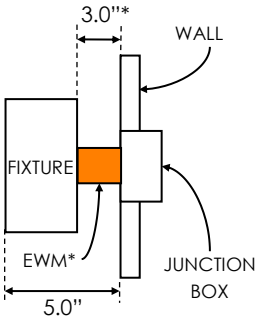

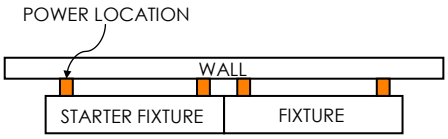

STEMWxx, STEMBxx (Stem Mount)

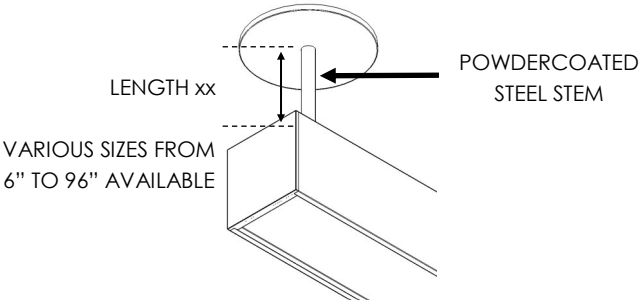

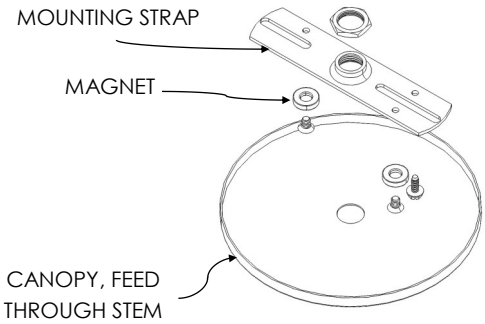

©2023 StarTek Lighting America. All rights reserved. The information in this document is subject to change without notice.

899 E Park Ave, Libertyville, IL 60048 ★ (877) STARTEK ★ www.starteklightingamerica.com

BEAM DIRECT

STARTEK LIGHTING AMERICA

ROW CONFIGURATIONS

xx (Run Length)

The standard construction of run lengths follows the logic of the table below. Consult factory for additional information.

Run lengths always start with the longest fixture and receives the power feed.

# of Sections	Total Length																																									
	2	3	4	5	6	7	8	9	10	11	12	13	14	15	16	17	18	19	20	21	22	23	24	25	26	27	28	29	30	31	32	33	34	35	36	37	38	39	40
2	1																																						
3		1																																					
4			1					1	1	1	1					1	1	1	1					1	1	1	1					1	1	1	1				
5				1				1				1				1				1				1				1				1				1			
6					1				1				1				1				1				1				1				1				1		
7						1				1				1				1				1				1				1				1				1	
8							1				1	1	1	1	2	1	1	1	2	2	2	2	3	2	2	2	3	3	3	3	4	3	3	3	4	4	4	4	5

NOTE: Fixtures in continuous runs are available in 6" increments. Consult factory for smaller increments.

Sxx (Symmetric Run)

The construction of Sxx (y') is to build with equal length fixtures. The xx indicates the run length. The y' indicates the fixture length used to create the run. Please indicate this on your P.O. when placing your order.

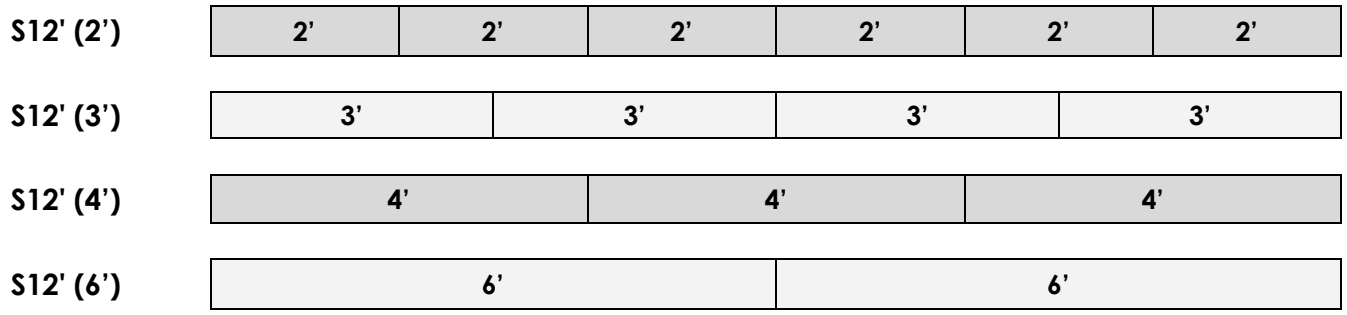

MOUNTING LOCATIONS

Each starter or individual fixture will be provided with (2) mounting supports (●). Each additional fixture will be provided with (1) support which can be located anywhere along the 2nd half of the fixture (highlighted below):

Examples of continuous run mounting locations are as follows:

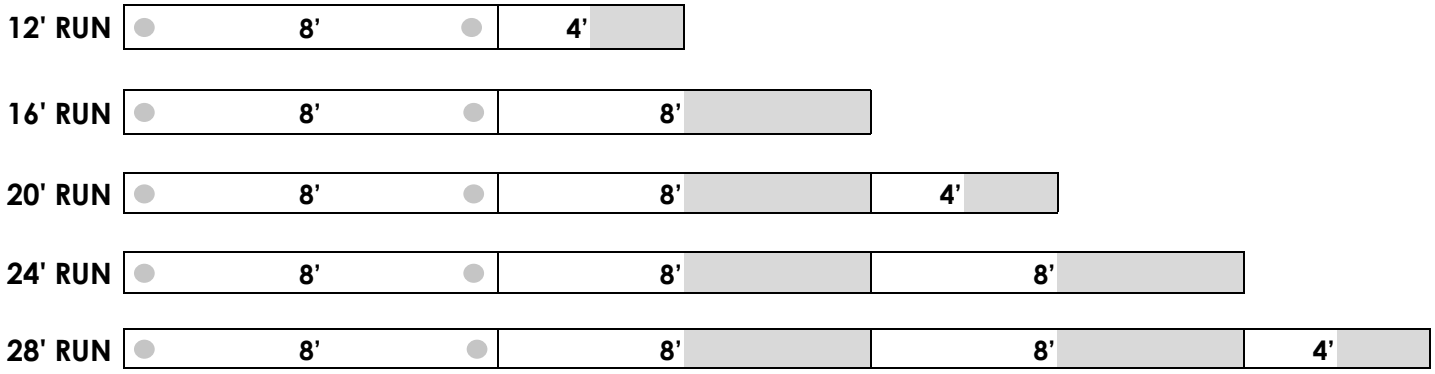

©2023 StarTek Lighting America. All rights reserved. The information in this document is subject to change without notice.

899 E Park Ave, Libertyville, IL 60048 ★ (877) STARTEK ★ www.starteklightingamerica.com

BEAM DIRECT

JOINT SHAPE CONFIGURATION WITH MITER CUTS

We provide joint configurations in the stock size of 24" X 24" as shown below.

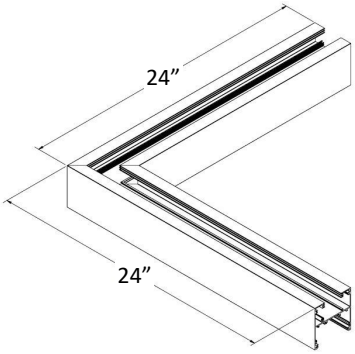

_x_RECT
Rectangle
Supply AxB dimensions

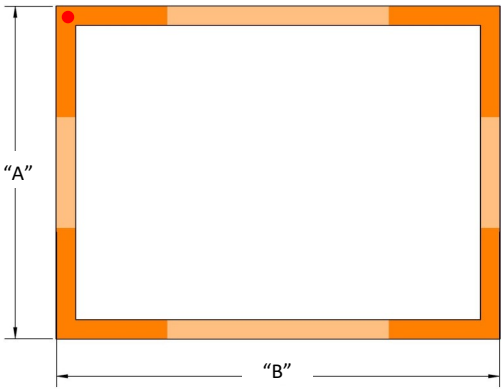

_x_L
L-Shape
Supply AxB dimensions

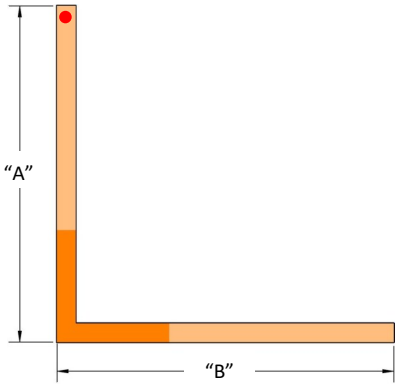

_x_ x_U
U-Shape
Supply AxBxC dimensions

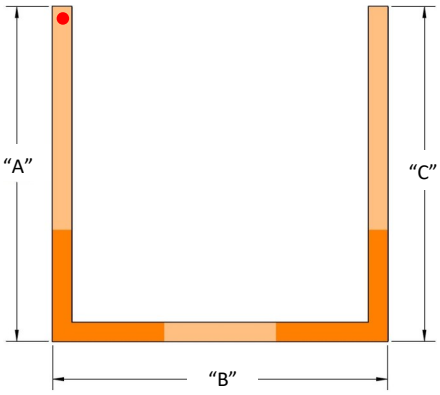

● = Power Location

©2023 StarTek Lighting America. All rights reserved. The information in this document is subject to change without notice.

899 E Park Ave, Libertyville, IL 60048 ★ (877) STARTEK ★ www.starteklightingamerica.com

BEAMD-X-625-SD (80+ CRI)

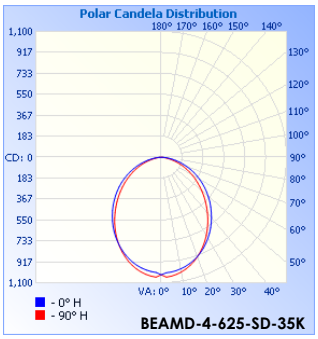

Model	Lumens	Watts	LPW
BEAMD-4-625-SD-30K	2500	20	123
BEAMD-4-625-SD-35K	2500	20	128
BEAMD-4-625-SD-40K	2500	19	131
BEAMD-4-625-SD-50K	2500	19	135

Model	Lumens	Watts	LPW
BEAMD-8-625-SD-30K	5000	39	128
BEAMD-8-625-SD-35K	5000	37	133
BEAMD-8-625-SD-40K	5000	37	136
BEAMD-8-625-SD-50K	5000	36	140

BEAMD-X-625-WD (80+ CRI)

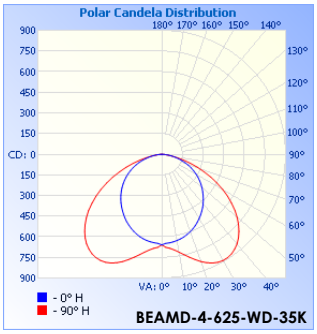

Model	Lumens	Watts	LPW
BEAMD-4-625-WD-30K	2500	21	117
BEAMD-4-625-WD-35K	2500	21	120
BEAMD-4-625-WD-40K	2500	20	123
BEAMD-4-625-WD-50K	2500	19	130

Model	Lumens	Watts	LPW
BEAMD-8-625-WD-30K	5000	41	122
BEAMD-8-625-WD-35K	5000	40	125
BEAMD-8-625-WD-40K	5000	39	128
BEAMD-8-625-WD-50K	5000	37	135

BEAMD-X-625-WW (80+ CRI)

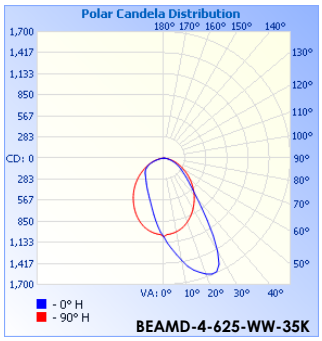

Model	Lumens	Watts	LPW
BEAMD-4-625-WW-30K	2500	21	117
BEAMD-4-625-WW-35K	2500	21	120
BEAMD-4-625-WW-40K	2500	20	123
BEAMD-4-625-WW-50K	2500	19	130

Model	Lumens	Watts	LPW
BEAMD-8-625-WW-30K	5000	41	122
BEAMD-8-625-WW-35K	5000	40	125
BEAMD-8-625-WW-40K	5000	39	128
BEAMD-8-625-WW-50K	5000	37	135

©2023 StarTek Lighting America. All rights reserved. The information in this document is subject to change without notice.

899 E Park Ave, Libertyville, IL 60048 ★ (877) STARTEK ★ www.starteklightingamerica.com

BEAM DIRECT

FINISHES

STANDARD FINISHES

WHITE MINI TEXTURE

BLACK MINI TEXTURE

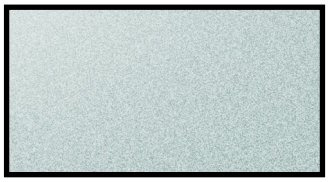

SILVER SPARKLE TEXTURE

PREMIUM STOCK FINISHES

PSF001 (WOOD#1)

PSF002 (WOOD#2)

PSF003 (WOOD#3)

PSF004 (WOOD#4)

PSF005 (WOOD#5)

PSF006 (WOOD#6)

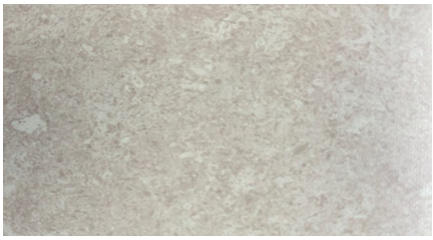

PSF007 (STONE #1)

PSF008 (STONE #2)

PSF009 (METAL #1)

NOTE: A minimal impact to lead times will apply to products specified with Premium Stock Finishes (PSF). It is not to be assumed that these finishes are stocked in our warehouse, but rather, are readily available to us for your project.

All other custom finishes (PO) will incur a set up fee and will add an extended lead time to your project.

©2023 StarTek Lighting America. All rights reserved. The information in this document is subject to change without notice.

899 E Park Ave, Libertyville, IL 60048 ★ (877) STARTEK ★ www.starteklightingamerica.com

BEAM DIRECT

SPECIFICATIONS

Housing
Nominal 3.5" x 3.5" x .075" thick housing of continuous extruded 6063 T5 aluminum.

Color
Colors for the housing are available in a powder coated white, black, silver, and woodgrain with end cap to match. Consult factory for custom colors.

Luminaire Length
2', 4', 6' or 8' lengths are available for a single stand-alone section. Using internal joiners, these sections can be joined to form longer rows.

End Caps
Injection molded flat end caps are mechanically attached with no exposed fasteners to enhance architectural aesthetic and prevent light leak.

Source
Lumen packages are available in four color temperature options (3000K, 3500K, 4000K and 5000K) — all within 3 MacAdam ellipses.

Certification
Intertek cETLus Listed. RoHS (Restriction of Hazardous Substances) and Buy American Act compliant.

Battery
Lithium ion battery providing up to 780lm(6W) or up to 1300lm(10W) for 90 minutes. UL924 listed. Class 2 compliant. Meets Title 20 CEC (California Energy Commission) efficiency standards.

Lensing
0.080" thick impact resistant acrylic lensing.

Environment
Suitable for dry and damp locations.
Operating temp.: -40°C to +50°C
-40°F to +122°F

Dimming Driver (Integral Driver)
Constant current programmable LED driver. UL listed, class P, 0-10V, dim to 1% of output current. 2.5KV ring wave surge protection and >.90 power factor.

Packaging
Sustainably manufactured outside cardboard box and biodegradable, protective poly-foam luminaire inserts.

CONTROL

Sensor

Wattstopper FS-205 v2 Low Voltage PIR. Integrated photosensor for hold-off daylighting control. 24VDC operating voltage. Adjustable time delay (30 seconds to 30 minutes).

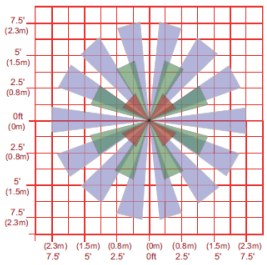

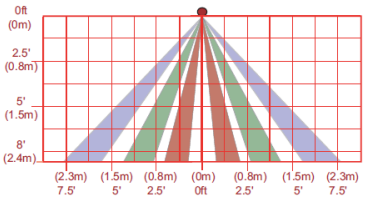

Wireless Node

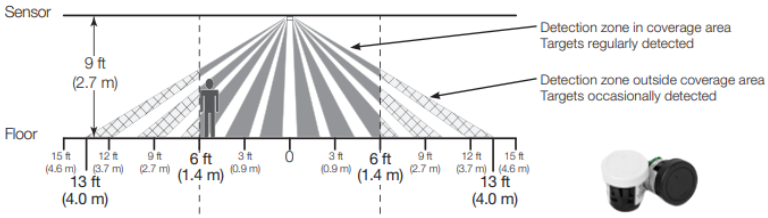

COMPANION PRODUCTS

Beam Direct/Indirect

Beam Surface Mount

Recessed Beam

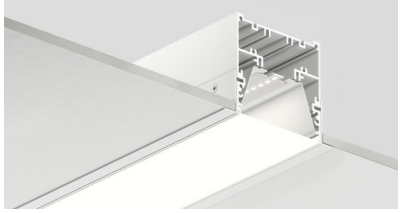

WARRANTY

5-year limited warranty. Complete warranty terms can be located at:

http://www.starteklightingamerica.com/images/pdf/warranty/Beam_Series_Warranty.pdf

Note: Actual performance may differ as a result of installation environment and final application.
All values are design or typical values, measured under laboratory conditions, at 25°C (77°F) .

©2023 StarTek Lighting America. All rights reserved. The information in this document is subject to change without notice.

899 E Park Ave, Libertyville, IL 60048 ★ (877) STARTEK ★ www.starteklightingamerica.com